Section A - A

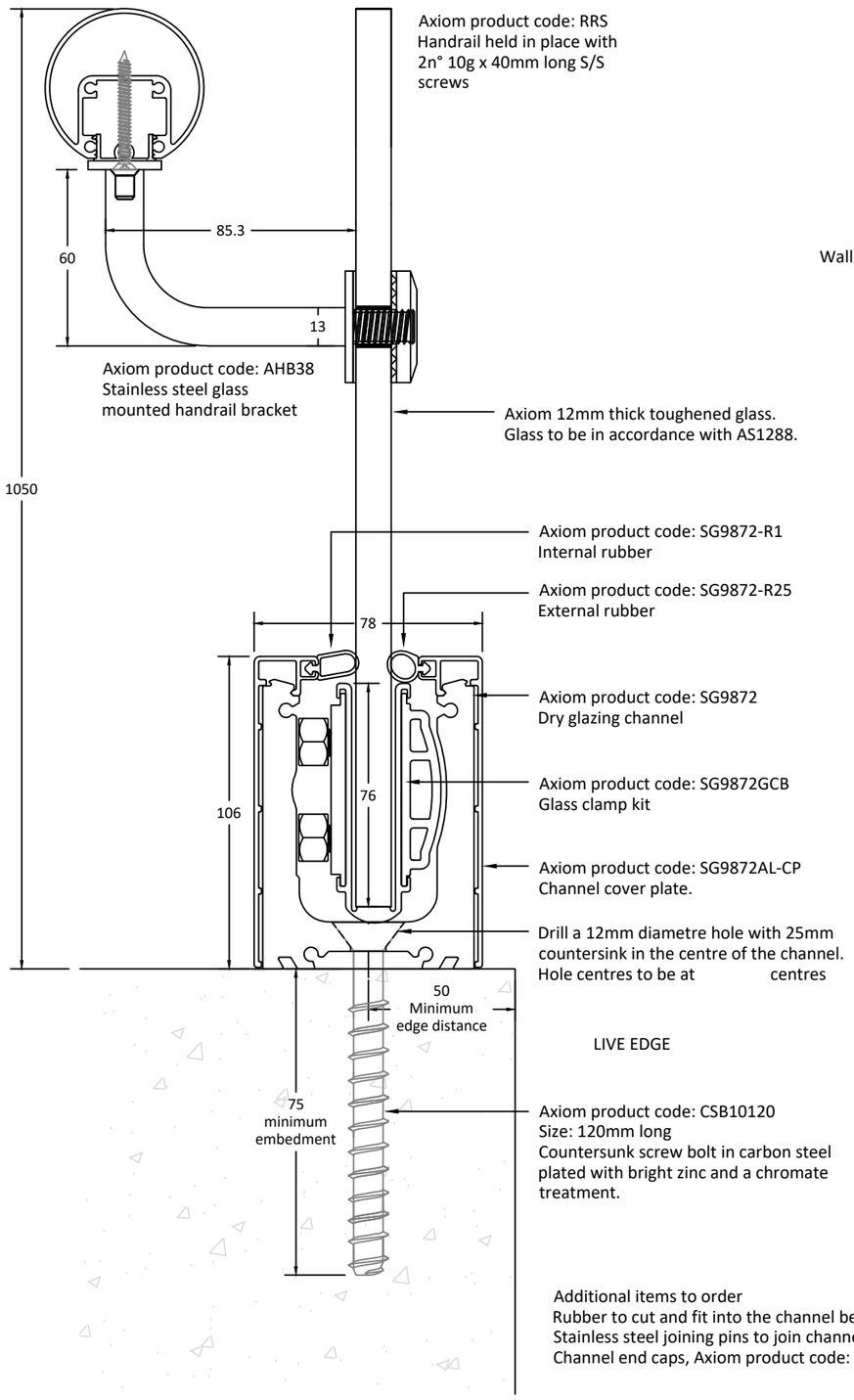

Elevation

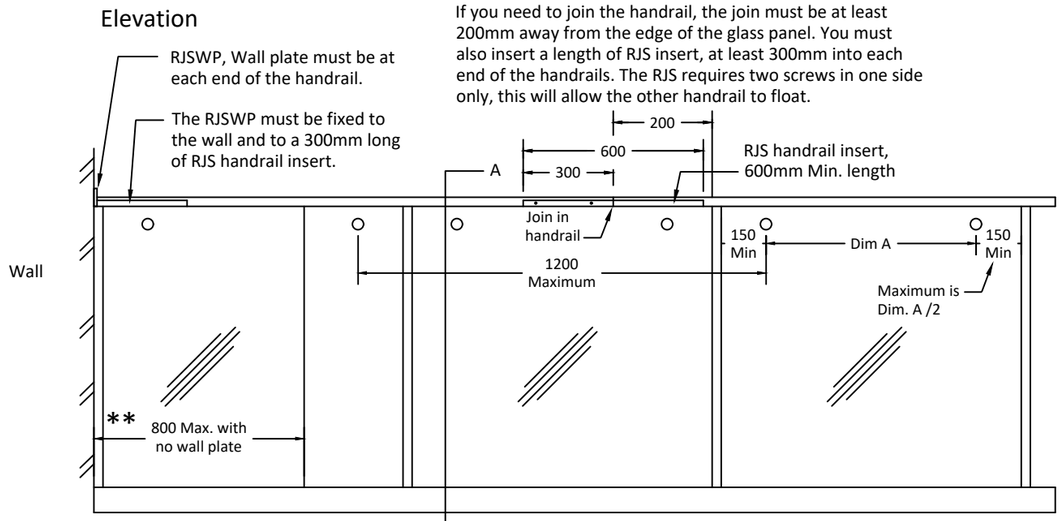

** If the handrail is not fixed to the wall, the end panel can not exceed the following:
700mm without a RJS handrail insert or
800mm with a RJS handrail insert. These distances must include the gaps between the glass.

Additional items to order
Rubber to cut and fit into the channel between each panel of glass, Axiom product code: SG9872GR
Stainless steel joining pins to join channels together, Axiom product code: SG9872JP
Channel end caps, Axiom product code: SG9872ECB

Elevations are for illustration purpose only.

Glass to be in accordance with AS1288 and AS 2208, with a minimum surface compression of 69 MPa.

Glass must be blocked and set in frame in accordance with AS1288 to ensure the glass can not dislodge.

Channel to bear hard on concrete, Pack hard with grout as required.

Handrail wall plates must be used if the end panels of glass are wider than 700mm with no continuous handrail insert or wider 800mm with a continuous handrail insert, including gaps.

Channel fixed down with a 10mm countersunk carbon steel screw bolt 120mm long @ 300mm centres.
75mm Min. embedment and
50mm edge distance.

Concrete slab to be verified by project engineer as structurally suitable to safely support balustrade loads.

Designed for C3 classification barrier in accordance with AS1170.1
Designed horizontal live load = 0.75kN/m
Designed infill live load = 1.0 kPa
Designed for wind in accordance with AS1170.2 (refer to table)

Additional requirements for toughened safety glass are required where the balustrade is more more than 5 metres above floor / ground.
Refer AS1288 / Amdt. 2 / 2011-11-11. clause 3.8

All aluminium to be 6106 T6 grade U.N.O.
All fixings to be A2 / 304 stainless steel U.N.O.

Top of handrail to be 1000mm Min. from FFL.

When Axiom products are concealed or in contact with screed, tile bed or another item that could cause corrosion, Axiom products must be adequately protected to prevent any corrosion.

It is the installers responsibility to ensure that any dissimilar metals are kept separated. Axiom Group recommends the use of nylon washers to keep dissimilar metals separated.

* Read this drawing in conjunction with the relevant engineering drawings. All products must be installed as specified by the engineer.

AXIOM GROUP	Style: Frameless balustrade system	Drawing n°. SD24-04	Wind region:	Revisions:	I_____
	Suite: Axiom Smart Glaze Suite	Drawn by: C R R	Terrain category:		Approve all details and specifications on this drawing for manufacture
	Title: Axiom SG9872 dry glazing channel with 12mm glass and RRS handrail mounted on a AHB38 handrail bracket	Date: 8 / 4 / 2019	Building height:		Signed:_____ Dated:_____
		U.N.O. All dimensions are in MM	Maximum post spacing: n/a		

Proprietary and Confidential
This drawing remains the sole property of Axiom Group Investments Pty Ltd. It must not be reproduced in part or in whole without consent from the Directors. Axiom reserves the right to amend drawings in the interest of continuous improvement.
E & O E