Elevations are for illustration purpose only.

Section A - A

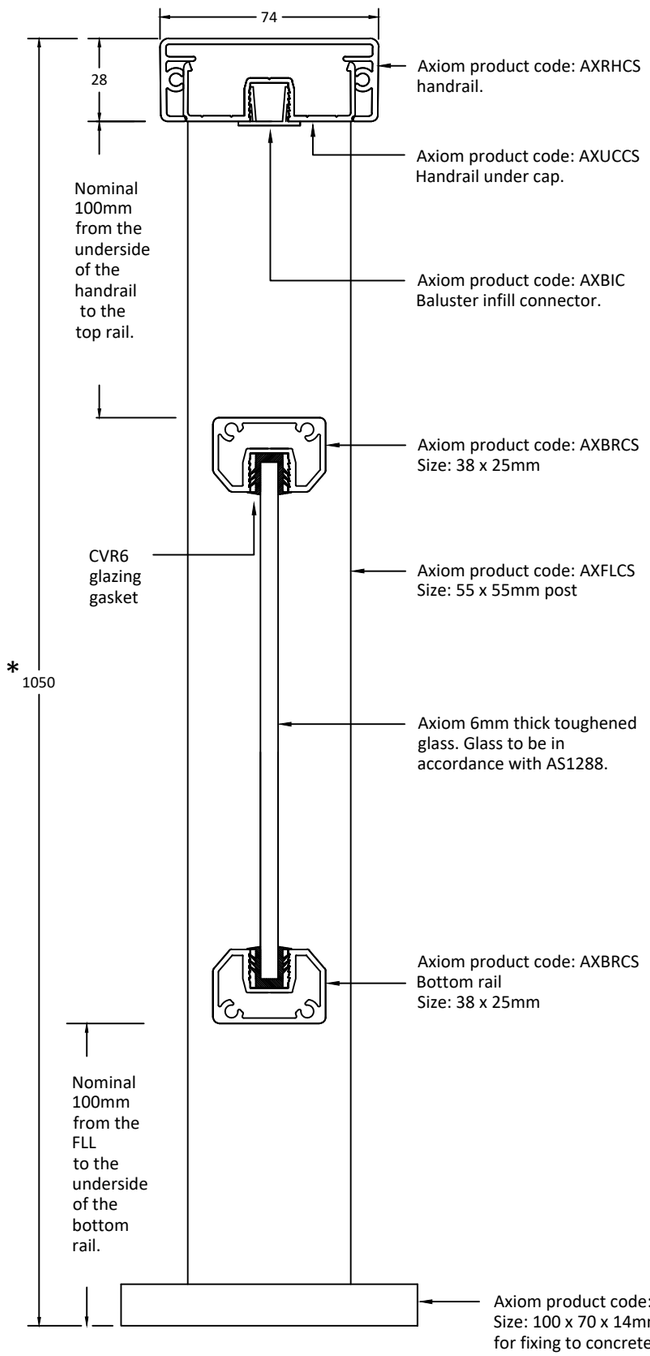

Elevation

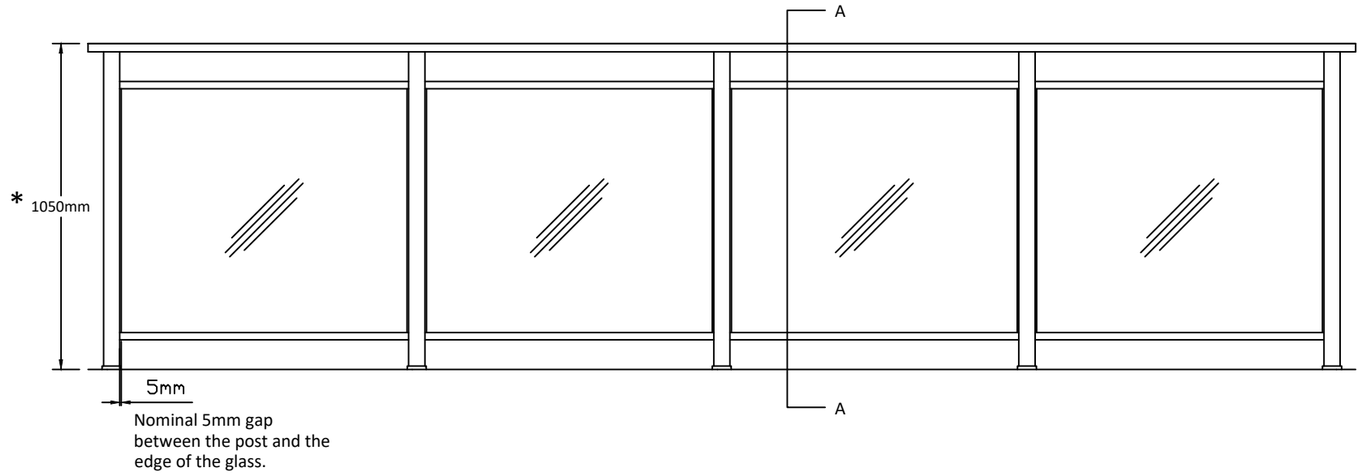

Isometric

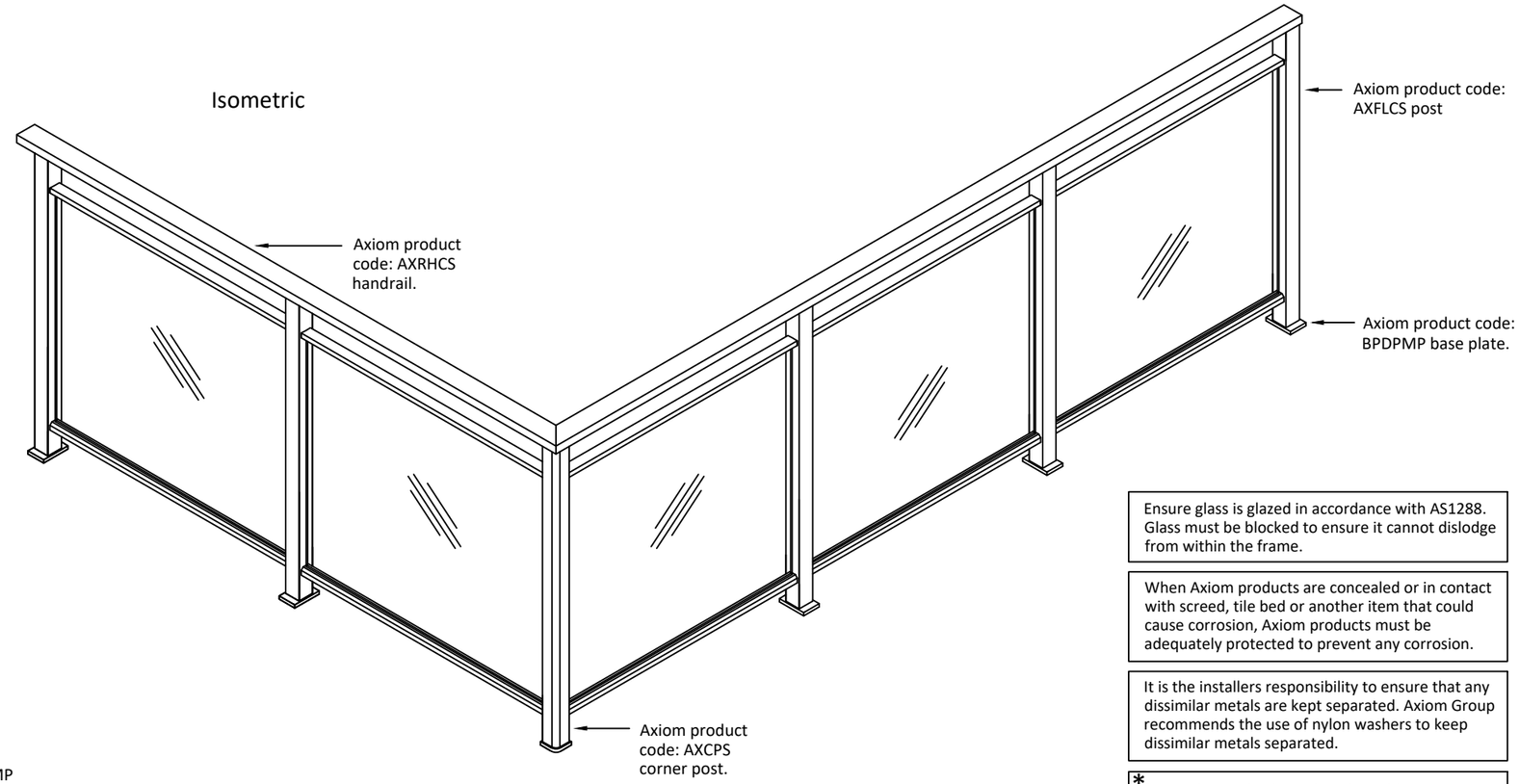

Ensure glass is glazed in accordance with AS1288. Glass must be blocked to ensure it cannot dislodge from within the frame.

When Axiom products are concealed or in contact with screed, tile bed or another item that could cause corrosion, Axiom products must be adequately protected to prevent any corrosion.

It is the installers responsibility to ensure that any dissimilar metals are kept separated. Axiom Group recommends the use of nylon washers to keep dissimilar metals separated.

* Read this drawing in conjunction with the relevant engineering drawings. All products must be installed as specified by the engineer.

AXIOM GROUP	Style: AxiLume Clearview System.	Scale as shown @ A1	Drawing n°. SD2-01	Checked by: HM	Job N°.
	Suite: Classic Suite	Paper Size: A1	Drawn by: C. Richardson	Revision: A	Drawing type: Suite drawing
	Product: AXFLCS post, BPDPMP baseplate and AXRHCS rectangular handrail.	Unless otherwise stated all dimensions are in MM	Date: 24 / 11 / 2015		This drawing has been produced using AutoCAD LT 2015

Proprietary and Confidential
This drawing remains the sole property of Axiom Group Investments Pty Ltd. It must not be reproduced in part or in whole without consent from the Directors. Axiom reserves the right to amend drawings in the interest of continuous improvement.
E & O E